UCT 3 (heavy-duty)

Take-up Units

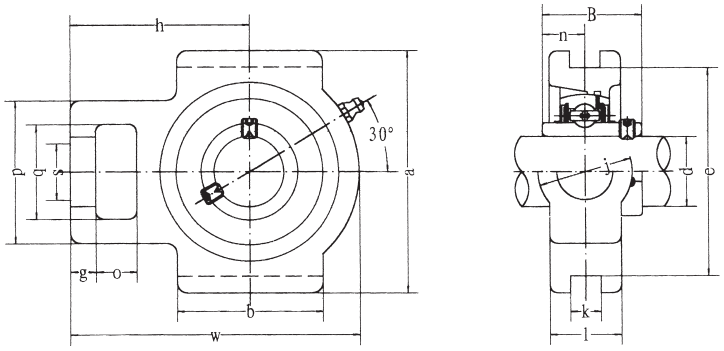

Unit No.	Dimensions mm / inch																Bearing No.	Housing No.	Weight (kg)
	d	O	g	p	q	s	b	k	e	a	w	j	i	h	B_1	n			
UCT 305	25	16	14	62	36	26	65	12	80	89	122	36	26	76	38	15	**UC 305**		
UCT 305-13	13/16																**UC 305-13**		
UCT 305-14	7/8	5/8	9/16	2-7/16	1-13/32	1-1/32	2-9/16	0.472	3-5/32	3-1/2	4-13/16	1-13/32	1-1/32	3	1.4961	0.591	**UC 305-14**	**T305**	1.4
UCT 305-15	15/16																**UC 205-15**		
UCT 305-16	1																**UC 305-16**		
UCT 306	30	18	16	70	41	28	74	16	90	100	137	41	28	85	43	17	**UC 306**		
UCT 306-17	1-1/16	23/32	5/8	2-3/4	1-5/8	1-3/32	2-29/32	0.630	3-55/64	3-15/16	5-13/32	1-5/8	1-3/32	3-11/32	1.6929	0.669	**UC 306-17**	**T306**	1.8
UCT 306-18	1-1/8																**UC 306-18**		
UCT 306-19	1-3/16																**UC 306-19**		
UCT 307	35	20	17	75	45	30	80	16	100	111	150	45	32	94	48	19	**UC 307**		
UCT 307-20	1-1/4																**UC 307-20**		
UCT 307-21	1-5/16	25/32	43/64	2-15/16	1-25/32	1-3/16	2-5/32	0.630	3-15/16	4-3/8	5-29/32	1-25/32	1-1/4	3-11/16	1.8898	0.748	**UC 307-21**	**T307**	2.4
UCT 307-22	1-3/8																**UC 307-22**		
UCT 307-23	1-7/16																**UC 307-23**		
UCT 308	40	22	19	83	50	32	89	18	112	124	162	50	34	100	52	19	**UC 308**		
UCT 308-24	1-1/2	7/8	3/4	3-17/64	1-31/32	1-1/4	3-1/2	0.709	4-13/32	4-7/8	6-3/8	1-21/32	1-11/32	3-15/16	2.0472	0.748	**UC 308-24**	**T308**	3.0
UCT 308-25	1-9/16																**UC 308-25**		
UCT 309	45	24	20	90	55	34	97	18	125	138	178	55	38	100	57	22	**UC 309**		
UCT 309-26	1-5/8																**UC 309-26**		
UCT 309-27	1-11/16	15/16	25/32	3-17/32	2-5/32	1-11/32	3-13/16	0.709	4-59/64	5-7/16	7	2-5/32	1-1/2	4-11/32	2.2441	0.866	**UC 309-27**	**T309**	5.0
UCT 309-28	1-3/4																**UC 309-28**		
UCT 310	50	27	22	98	61	37	106	20	140	151	192	61	40	118	61	22	**UC 310**		
UCT 310-29	1-13/16																**UC 310-29**		
UCT 310-30	1-7/8	1-1/16	7/8	3-27/32	2-13/32	1-15/32	4-3/16	0.787	5-33/64	5-15/16	7-9/16	2-13/32	1-9/16	4-21/32	2.4016	0.866	**UC 310-30**	**T310**	5.0
UCT 310-31	1-15/16																**UC 310-31**		
UCT 311	55	29	23	105	66	39	115	22	150	163	207	66	44	127	66	25	**UC 311**		
UCT 311-32	2																**UC 311-32**		
UCT 311-33	2-1/16	1-15/16	29/32	4-1/8	2-19/32	1-17/32	4-17/32	0.866	5-29/32	6-13/32	8-5/32	2-19/32	1-23/32	5	2.5984	0.984	**UC 311-33**	**T311**	6.4
UCT 311-34	2-1/8																**UC 311-34**		
UCT 311-35	2-3/16																**UC 311-35**		
UCT 312	60	31	25	113	71	41	123	22	160	178	220	71	46	135	71	26	**UC 312**		
UCT 312-36	2-1/4																**UC 312-36**		
UCT 312-37	2-5/16	1-7/32	31/32	4-7/16	2-25/32	1-5/8	4-27/32	0.866	6-19/64	7	8-21/32	2-25/32	1-13/16	5-5/16	2.7953	1.024	**UC 312-37**	**312**	7.6
UCT 312-38	2-3/8																**UC 312-38**		
UCT 312-39	2-7/16																**UC 312-39**		
UCT 313	65	32	27	116	70	43	134	26	170	190	238	80	50	146	75	30	**UC 313**		
UCT 313-40	2-1/2	1-17/64	1-1/16	4-9/16	2-3/4	1-11/16	5-9/32	1.024	6-11/16	7-15/32	9-3/8	3-5/32	1-31/32	5-3/4	2.9528	1.181	**UC 313-40**	**T313**	9.7
UCT 313-41	2-9/16																**UC 313-41**		
UCT 314	70	36	27	130	85	46	140	26	180	202	252	90	52	155	78	33	**UC 314**		
UCT 314-42	2-5/8																**UC 314-42**		
UCT 314-43	2-11/16	1-13/32	1-1/16	5-1/8	3-11/32	1-13/16	5-1/2	1.024	7-3/32	7-15/16	9-29/32	3-17/32	2-1/16	6-3/32	3.2283	1.299	**UC 314-43**	**T314**	11
UCT 314-44	2-3/4																**UC 315-44**		
UCT 315	75	36	27	132	85	46	150	26	192	216	262	90	55	160	82	32	**UC 315**		
UCT 315-45	2-13/16																**UC 315-45**		
UCT 315-46	2-7/8																**UC 315-46**	**T315**	14
UCT 315-47	2-15/16	1-13/32	1-1/16	5-3/16	3-11/32	1-13/16	5-29/32	1.024	7-9/16	8-1/2	10-5/16	3-17/32	2-5/32	6-5/16	3.2283	1.260	**UC 315-47**		
UCT 315-48	3																**UC 315-48**		
UCT 316	80	42	30	150	98	53	160	30	204	230	282	102	60	174	86	34	**UC 316**		
UCT 316-49	3-1/16																**UC 316-49**		
UCT 316-50	3-1/8	1-21/32	1-3/16	5-29/32	3-27/32	2-3/32	6-5/16	1.181	8-1/32	9-1/16	11-3/32	4-1/32	2-3/8	6-27/32	3.2283	1.260	**UC 316-50**	**T316**	16
UCT 316-51	3-3/16																**UC 316-51**		
UCT 317	85	42	32	152	98	53	170	32	214	240	298	102	64	183	96	40	**UC 317**		
UCT 317-52	3-1/4																**UC 317-52**		
UCT 317-53	3-5/16	1-21/32	1-1/4	5-31/32	3-27/32	2-3/32	6-11/16	1.260	8-27/64	9-7/16	11-23/32	4-1/32	2-17/32	7-7/32	3.7795	1.575	**UC 317-53**	**T317**	20
UCT 317-55	3-7/16																**UC 317-55**		
UCT 318	90	46	32	160	106	57	175	32	228	255	312	110	66	192	96	40	**UC 318**		
UCT 318-55	3-7/16	1-13/16	1-1/4	6-5/16	4-3/16	2-1/4	6-7/8	1.260	8-31/32	10-1/32	12-9/32	4-11/32	2-19/32	7-9/16	3.7795	1.575	**UC 318-55**	**T318**	22
UCT 318-56	3-1/2																**UC 318-56**		
UCT 319	95	46	33	165	106	57	180	35	240	270	322	110	72	197	103	41	**UC 319**		
UCT 319-58	3-5/8																**UC 319-58**		
UCT 319-59	3-11/16	1-13/16	1-5/16	6-1/2	4-3/16	2-1/4	7-3/32	1.378	9-26/64	10-5/8	12-11/16	4-11/32	2-27/32	7-3/4	4.0551	1.614	**UC 319-59**	**T319**	24
UCT 319-60	3-3/4																**UC 319-60**		